A Hydrostatic Dynamical Core using Structure-Preserving Finite Elements

Chris Eldred, Thomas Dubos, Evaggelos Kritsikis, Daniel Le Roux and Fabrice Voitus

March 3rd, 2017

1. Introduction
2. Structure Preservation
3. Tensor Product Mimetic Galerkin Methods
4. Actual Model and Results
5. Future Work, Summary and Conclusions

Introduction

Guiding Principles

1. Not solving arbitrary PDEs: building model of a physical system (no analytic solutions)
2. Differential equations → algebraic equations
3. **Do algebraic solutions have the same properties as the differential (true) solutions?**

(Incomplete) List of Desirable Model Properties

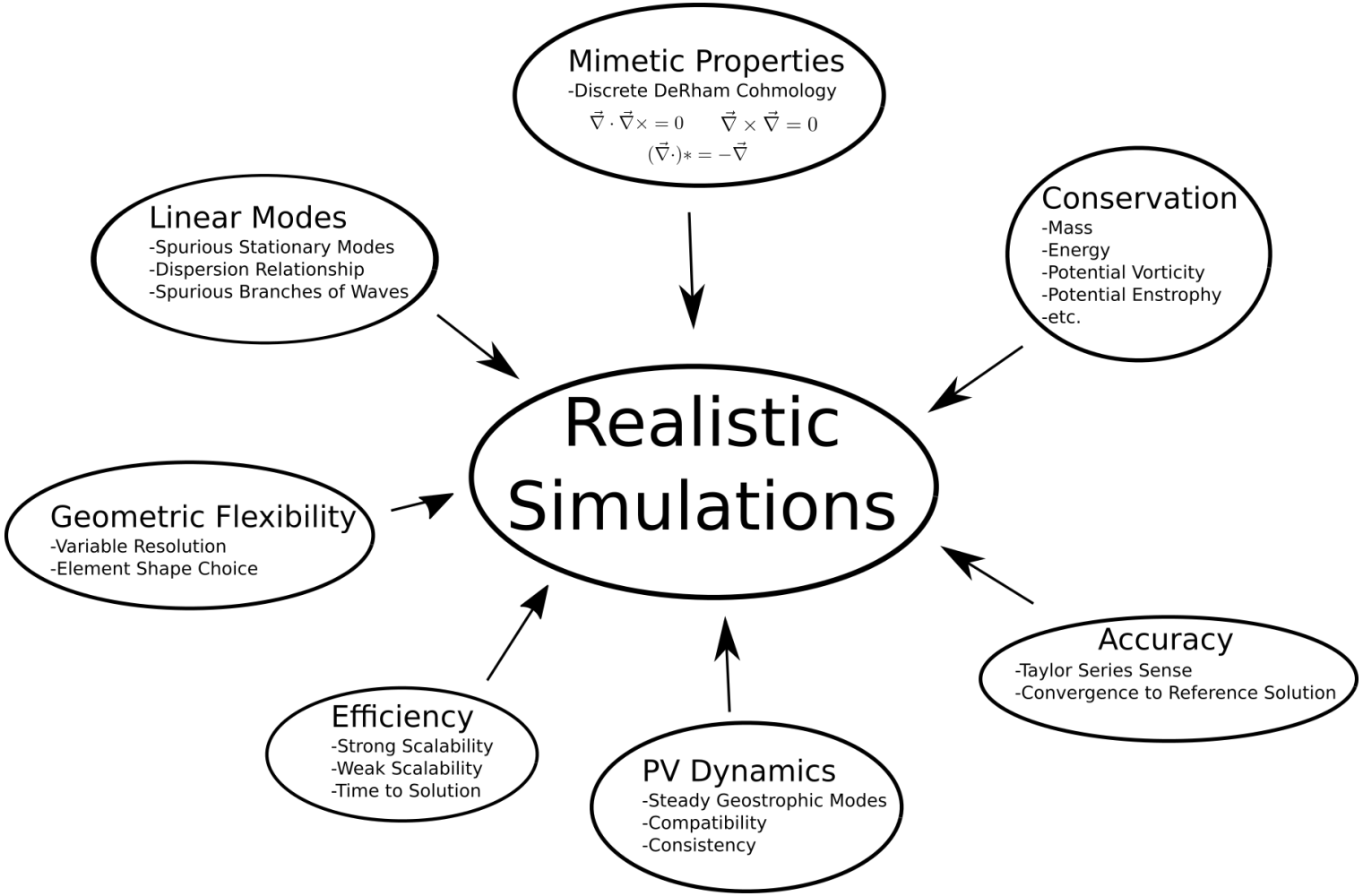

Structure Preservation

What is structure-preservation?

Obtaining these properties

1. **Hamiltonian Formulation**: Easily expresses conservation of mass, total energy and possibly other invariants

$$\frac{d\mathcal{H}}{dt} = 0$$

$$\frac{d\mathcal{C}}{dt} = 0$$

2. **Mimetic Discretization**: Discrete analogues of vector calculus identities (such as curl-free vorticity, div and grad are adjoints, etc.)

$$\vec{\nabla} \times \vec{\nabla} = 0$$

$$\vec{\nabla} \cdot \vec{\nabla} \times = 0$$

$$(\vec{\nabla} \cdot)^* = -\vec{\nabla}$$

Non-Canonical Hamiltonian Dynamics

Evolution of an arbitrary functional $\mathcal{F} = \mathcal{F}[\vec{x}]$ is governed by:

$$\frac{d\mathcal{F}}{dt} = \{\frac{\delta\mathcal{F}}{\delta\vec{x}}, \frac{\delta\mathcal{H}}{\delta\vec{x}}\} \tag{1}$$

with Poisson bracket $\{,\}$ antisymmetric (also satisfies Jacobi):

$$\{\frac{\delta\mathcal{F}}{\delta\vec{x}}, \frac{\delta\mathcal{G}}{\delta\vec{x}}\} = -\{\frac{\delta\mathcal{G}}{\delta\vec{x}}, \frac{\delta\mathcal{F}}{\delta\vec{x}}\} \tag{2}$$

Also have Casimirs $\mathcal{C}$ that satisfy:

$$\{\frac{\delta\mathcal{F}}{\delta\vec{x}}, \frac{\delta\mathcal{C}}{\delta\vec{x}}\} = 0 \quad \forall\mathcal{F} \tag{3}$$

Neatly encapsulates conservation properties ($\mathcal{H}$ and $\mathcal{C}$).

General Formulation for Mimetic Discretizations: Primal deRham Complex (Finite Element Type Methods)

$$\begin{tikzcd}
\mathbb{W}_0 \arrow[r, "d", "\vec{\nabla}"'] & \mathbb{W}_1 \arrow[r, "d", "\vec{\nabla}\times"'] \arrow[l, bend left, dashed, "\vec{\nabla}\cdot", "\delta"'] & \mathbb{W}_2 \arrow[r, "d", "\vec{\nabla}\cdot"'] \arrow[l, bend left, dashed, "\vec{\nabla}\times", "\delta"'] & \mathbb{W}_3 \arrow[l, bend left, dashed, "\vec{\nabla}", "\delta"']
\end{tikzcd}$$

$$(da^k, b^{k+1}) = (a^k, \delta b^{k+1})$$

$$\delta = *d*$$

$$\nabla^2 = d\delta + \delta d$$

$$\vec{\nabla} \cdot \vec{\nabla}\times = 0 = \vec{\nabla} \times \vec{\nabla}$$

$$dd = 0 = \delta\delta$$

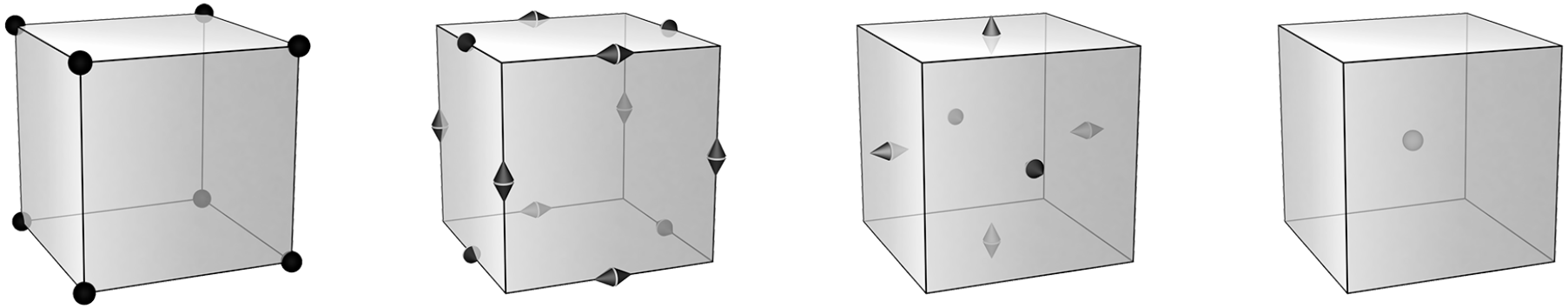

$\mathbb{W}_0$ $\mathbb{W}_1$ $\mathbb{W}_2$ $\mathbb{W}_3$

What properties do we get?

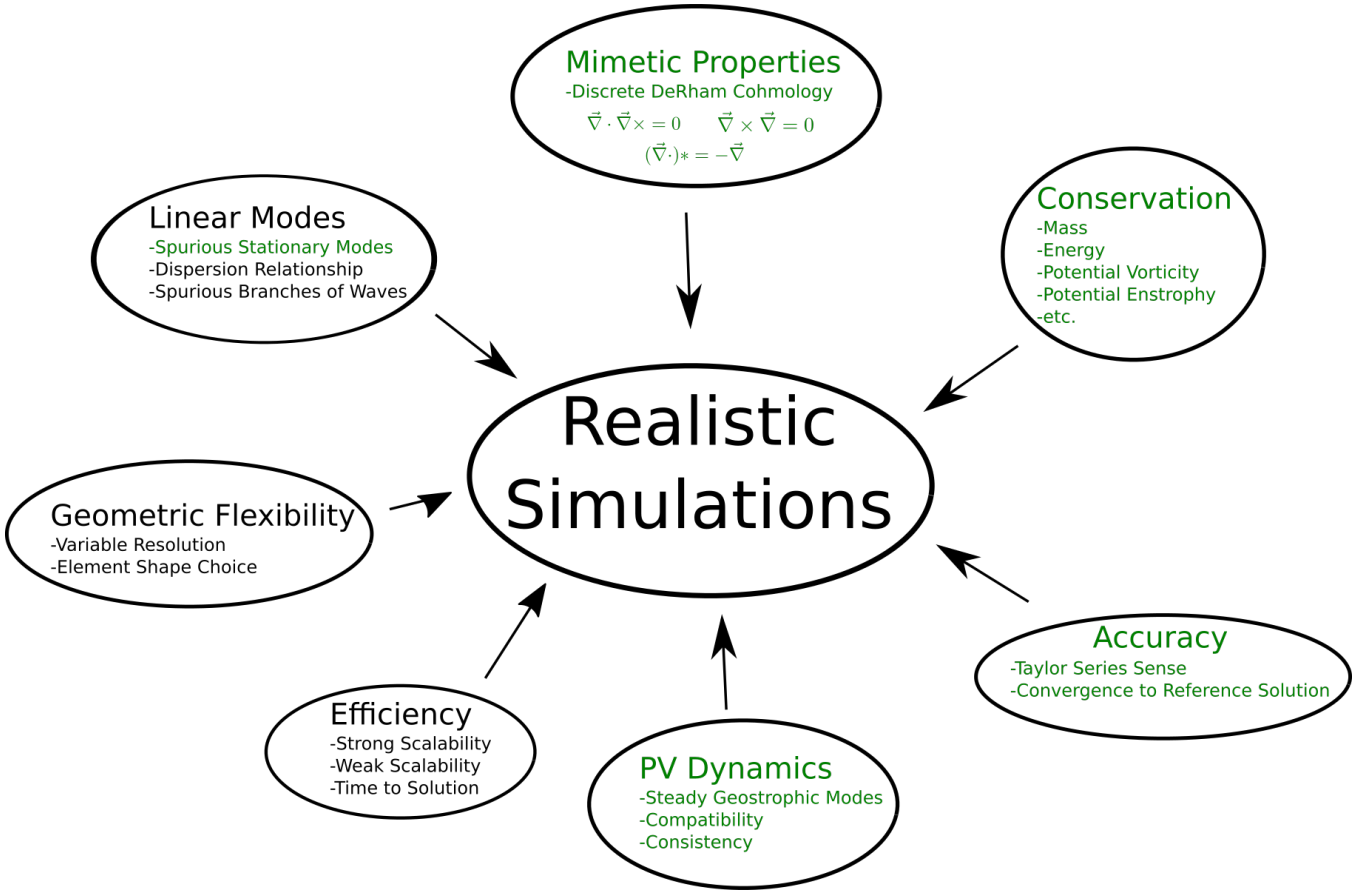

There are MANY choices of spaces that give these properties: key point is the deRham complex

What properties are still lacking?

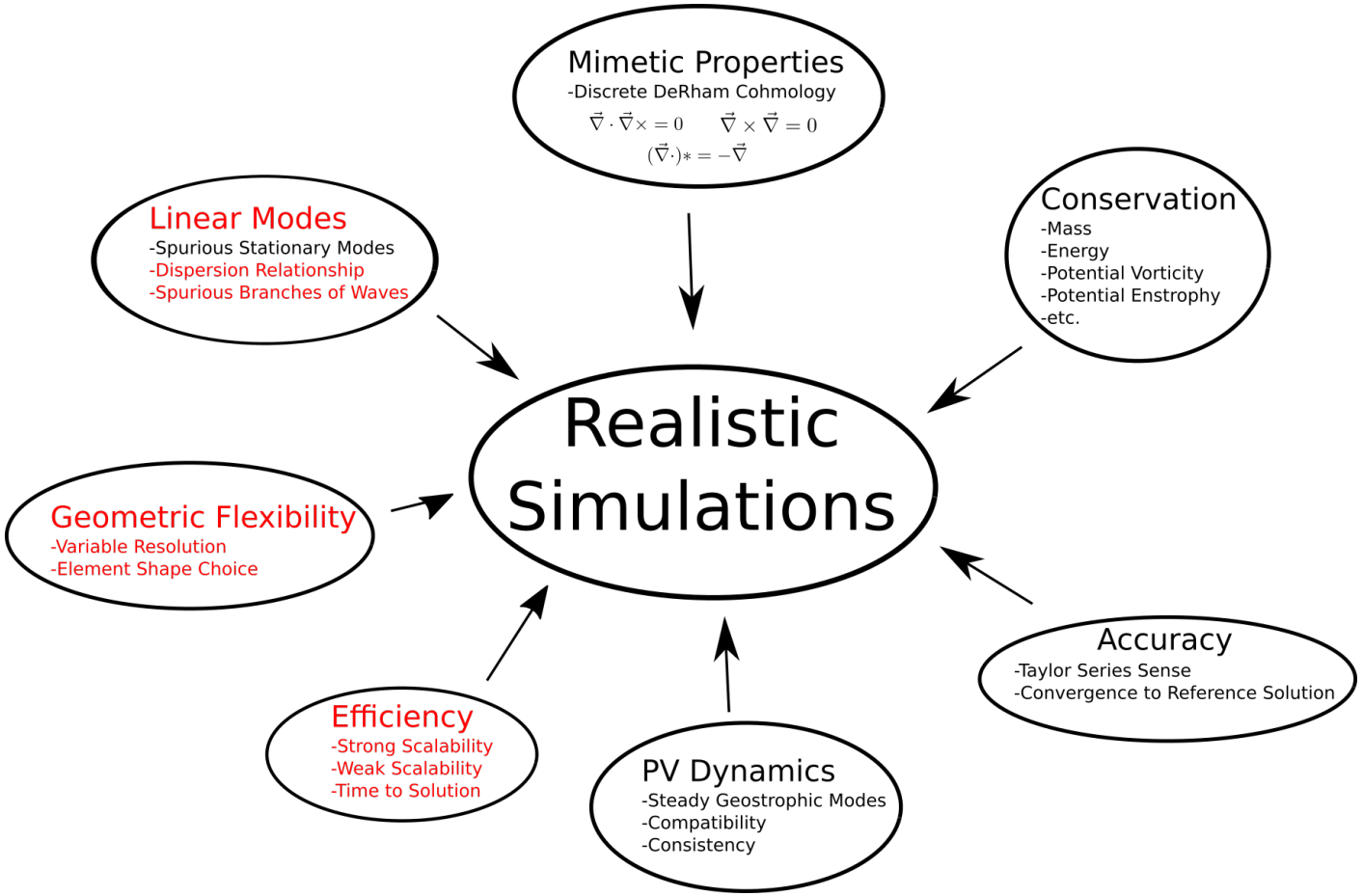

These are a function of the specific choice of spaces

Tensor Product Mimetic Galerkin Methods

Tensor Product Mimetic Galerkin Spaces

Tensor Product Mimetic Galerkin Spaces

$$\text{Select 1D Spaces } \mathcal{A} \text{ and } \mathcal{B} \text{ such that } : \mathcal{A} \xrightarrow{\frac{d}{dx}} \mathcal{B} \tag{4}$$

- Use tensor products to extend to n-dimensions
- Works for ANY set of spaces $\mathcal{A}$ and $\mathcal{B}$ that satisfy this property (compatible finite elements use P_n and $P_{DG,n-1}$; other choices yield mimetic spectral elements and compatible isogeometric methods)
- Our (novel) choices of $\mathcal{A}$ and $\mathcal{B}$ are guided by linear mode properties and coupling to physics/tracer transport

How do we get the remaining properties?

Tensor Product Mimetic Galerkin Methods on Structured Grids

1. **Tensor product + structured grids**: efficiency
2. **Quadrilateral grids**- no spurious wave branches
3. **Key: What about dispersion relationships?**

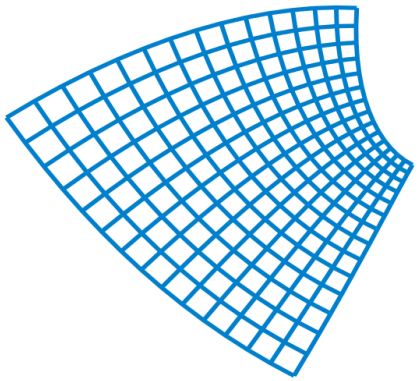

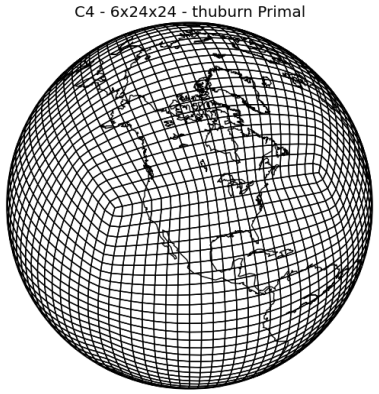

$P_2 - P_{1,DG}$ Dispersion Relationship

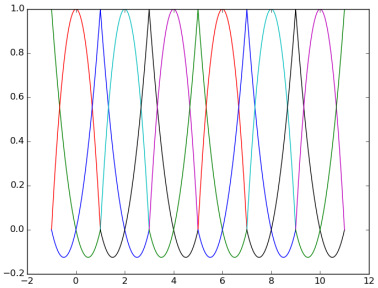

$\mathcal{A} = H_1$ Space (1D)

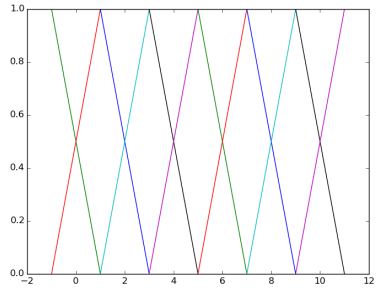

$\mathcal{B} = L_2$ Space (1D)

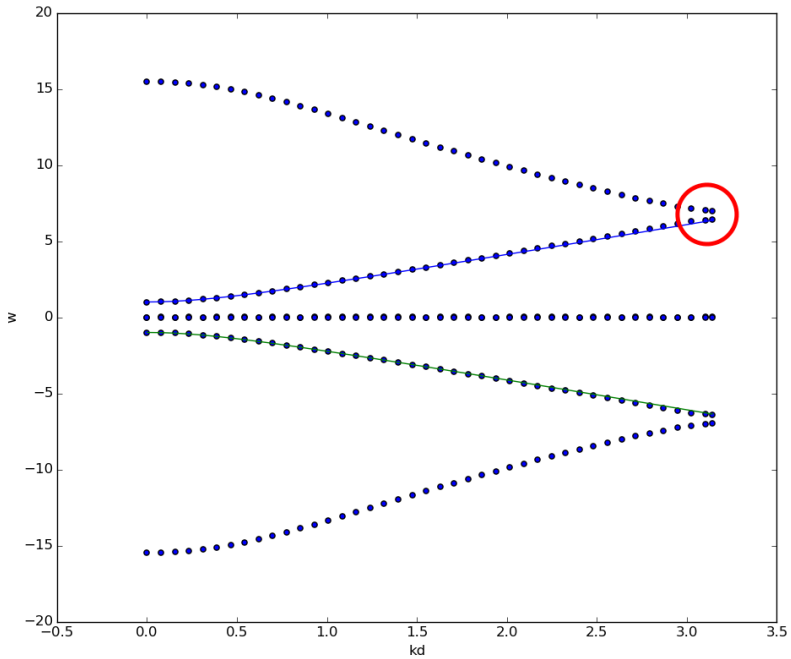

Inertia-Gravity Wave Dispersion Relationship (1D)

Multiple dofs per element → breaks translational invariance → spectral gaps

Mimetic Galerkin Differences: Basis (3rd Order)

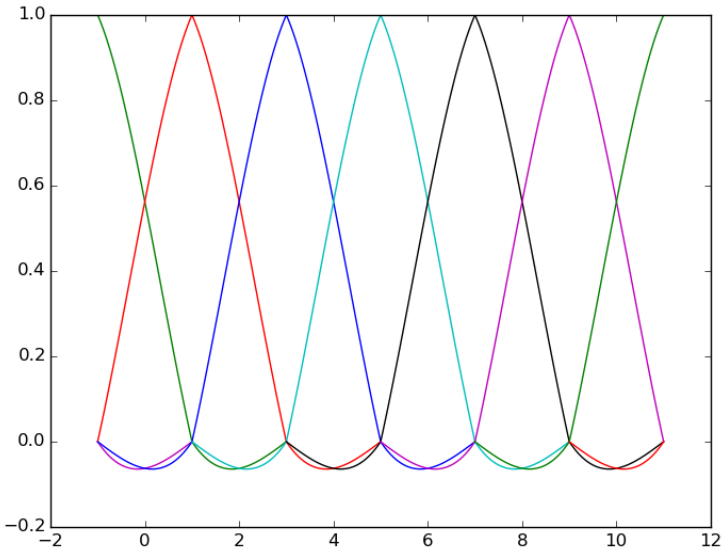

$\mathcal{A} = H_1$ Space (1D)

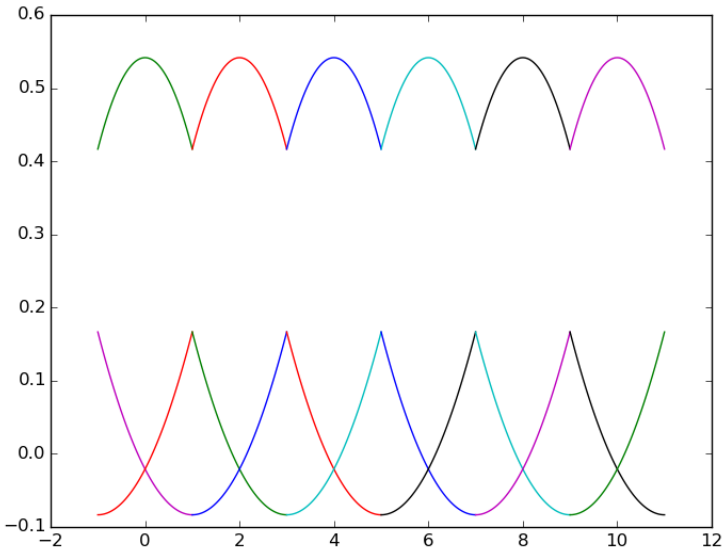

$\mathcal{B} = L_2$ Space (1D)

Single degree of freedom per geometric entity (physics coupling)
Higher order by larger stencils (less local, efficiency concerns)

Mimetic Galerkin Differences: Dispersion

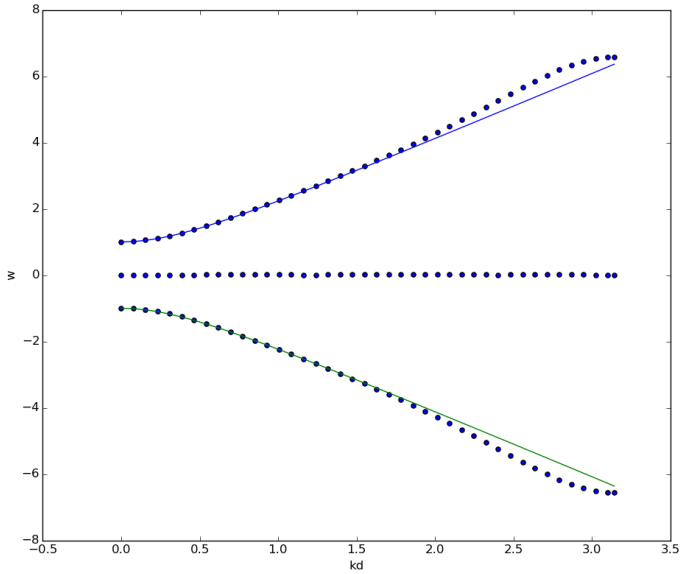

Inertia-Gravity Wave Dispersion Relationship (1D) for 3rd Order Elements

Spectral gap is gone

Can show that dispersion relation is $O(2n)$ where n is the order

More details in a forthcoming paper

Overview of 3D Spaces

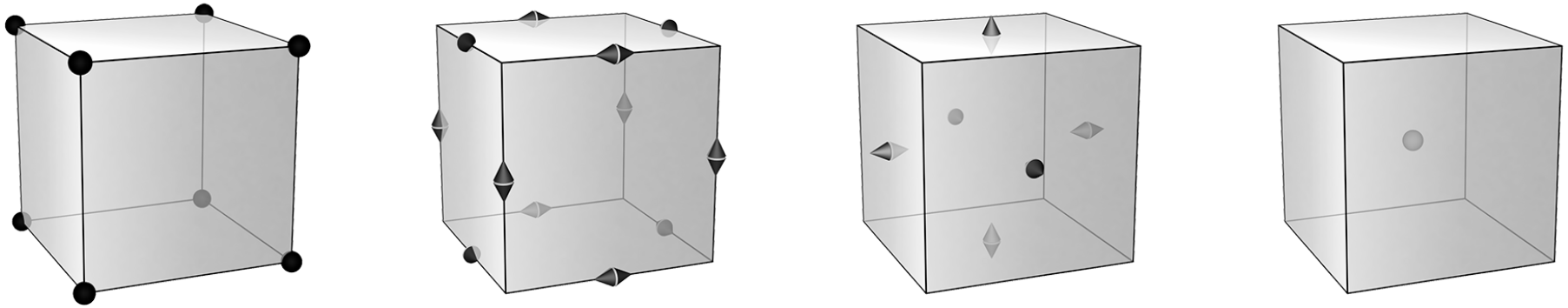

$\mathbb{W}_0$ $\mathbb{W}_1$ $\mathbb{W}_2$ $\mathbb{W}_3$

$$\mathbb{W}_0 \xrightarrow{\vec{\nabla}} \mathbb{W}_1 \xrightarrow{\vec{\nabla}\times} \mathbb{W}_2 \xrightarrow{\vec{\nabla}\cdot} \mathbb{W}_3$$

$\mathbb{W}_0 = \mathcal{A} \otimes \mathcal{A} \otimes \mathcal{A} = H_1 =$ Continuous Galerkin
$\mathbb{W}_1 = (\mathcal{B} \otimes \mathcal{A} \otimes \mathcal{A})\hat{i} + \ldots = H(curl) =$ Nedelec
$\mathbb{W}_2 = (\mathcal{A} \otimes \mathcal{B} \otimes \mathcal{B})\hat{i} + \ldots = H(div) =$ Raviart-Thomas
$\mathbb{W}_3 = \mathcal{B} \otimes \mathcal{B} \otimes \mathcal{B} = L_2 =$ Discontinuous Galerkin

Actual Model and Results

Prognostic Variables and Grid Staggering for HPE

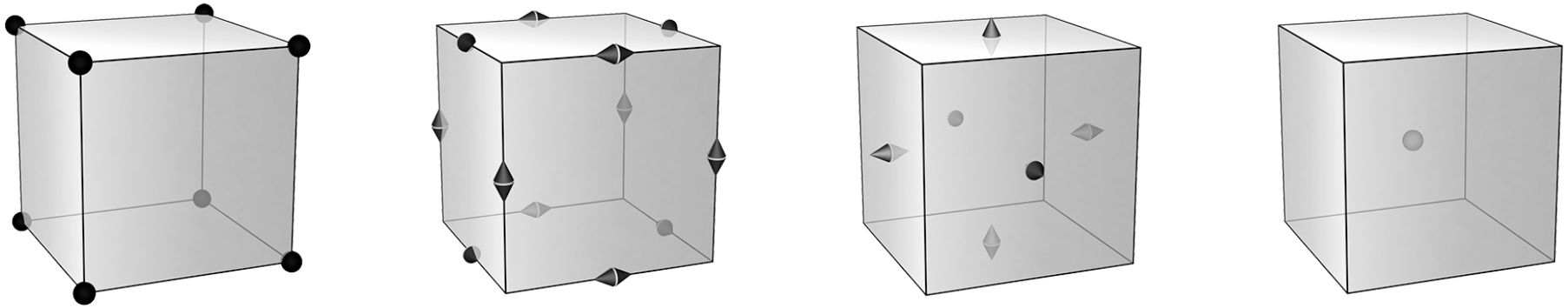

$\mathbb{W}_0$ $\mathbb{W}_1$ $\vec{\zeta}$ $\mathbb{W}_2$ $\vec{v}, W, z$ $\mathbb{W}_3$ μ, S, M_s

Prognose (1) μ or $M_s = \int \mu$, (2) $\vec{v} = \vec{u} + \vec{R}$ and (3) $S = \mu s$ (or $\Theta = \mu\theta$)
Diagnose z from hydrostatic balance
Galerkin Version of a C/Lorenz Grid

Equations of Motion: Lagrangian Vertical Coordinate (1)

$$\left\langle \hat{\mu}, \frac{\partial \mu}{\partial t} \right\rangle + \left\langle \hat{\mu}, \vec{\nabla} \cdot \left(\frac{\delta \mathcal{H}}{\delta \vec{v}}\right) \right\rangle = 0 \tag{5}$$

$$\left\langle \hat{S}, \frac{\partial S}{\partial t} \right\rangle + \left\langle \hat{S}, \vec{\nabla} \cdot \left(s\frac{\delta \mathcal{H}}{\delta \vec{v}}\right) \right\rangle = 0 \tag{6}$$

$$\left\langle \hat{v}, \frac{\partial \vec{v}}{\partial t} \right\rangle - \left\langle \vec{\nabla} \cdot \hat{v}, \frac{\delta \mathcal{H}}{\delta \mu} \right\rangle + \left\langle \hat{v}, q\hat{k} \times \left(\frac{\delta \mathcal{H}}{\delta \vec{v}}\right) \right\rangle - \left\langle \vec{\nabla} \cdot (s\hat{v}), \frac{\delta \mathcal{H}}{\delta S} \right\rangle = 0 \tag{7}$$

$$\mathcal{H} = \int \mu \left[\Phi + K + U(\alpha, s)\right] + \int_{\Gamma^T} p_\infty z \tag{8}$$

Equations of Motion: Lagrangian Vertical Coordinate (2)

$$\left\langle \hat{\mu}, \frac{\delta \mathcal{H}}{\delta \mu} \right\rangle = \langle \hat{\mu}, K + \Phi + U + p\alpha - sT \rangle \tag{9}$$

$$\left\langle \hat{S}, \frac{\delta \mathcal{H}}{\delta S} \right\rangle = \left\langle \hat{S}, T \right\rangle \tag{10}$$

$$\left\langle \hat{v}, \frac{\delta \mathcal{H}}{\delta \vec{v}} \right\rangle = \langle \hat{v}, \mu \vec{u} \rangle \tag{11}$$

$$\left\langle \hat{z}, \frac{\delta \mathcal{H}}{\delta z} \right\rangle = \left\langle \hat{z}, \mu \frac{\partial K}{\partial z} + \mu \frac{\partial \Phi}{\partial z} \right\rangle - \left\langle \frac{\partial \hat{z}}{\partial \eta}, p \right\rangle - \langle \hat{z}, [[p]] \rangle_{\Gamma^I} - \langle \hat{z}, p \rangle_{\Gamma^B} + \langle \hat{z}, p_\infty \rangle_{\Gamma^T} = 0 \tag{12}$$

Dynamico-FE Results 1

Hydrostatic Gravity Wave

1. Adaptation of Dynamical Core Model Intercomparison Project Test 3.1 (DCMIP3.1) to the plane
2. Steady state in hydrostatic and gradient wind balance
3. Zonal velocity a function of meridional (y) direction
4. Add a potential temperature perturbation

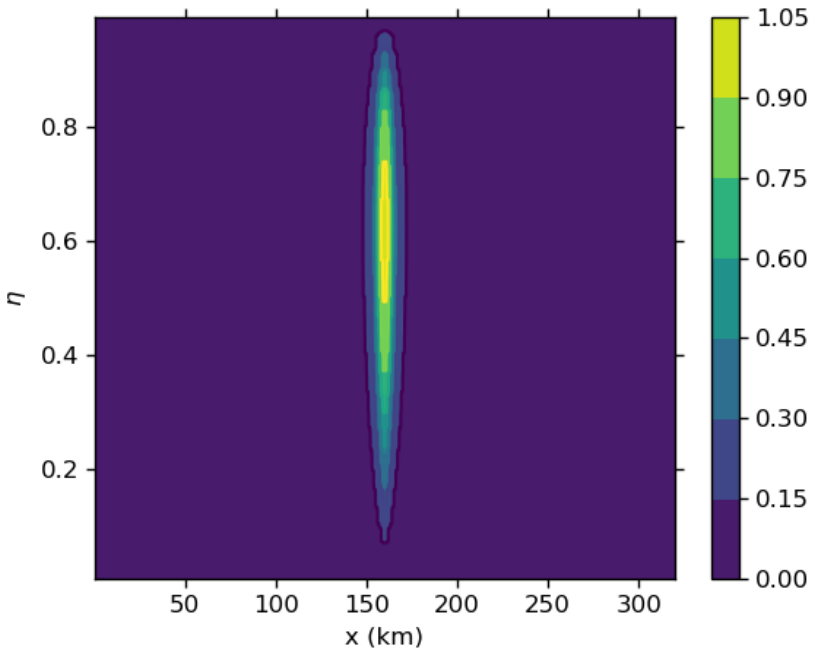

θ'

Dynamico-FE Results 2

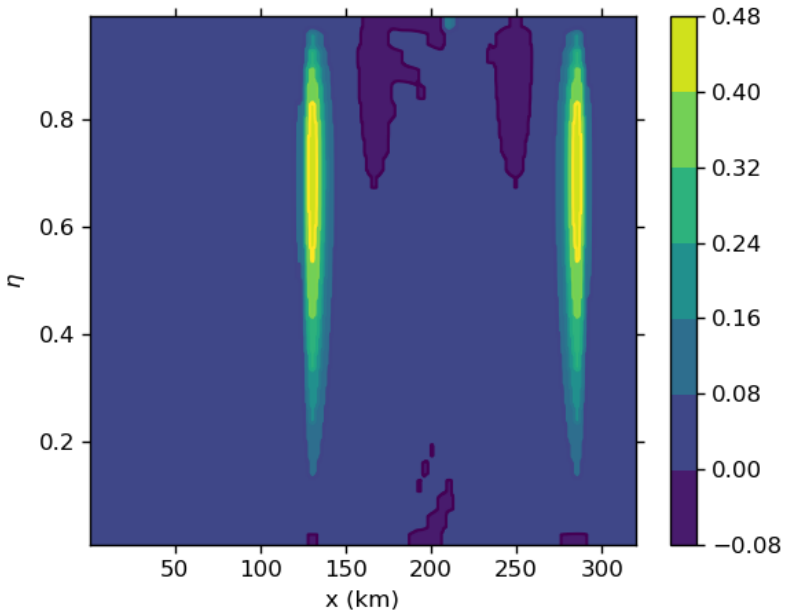

θ'

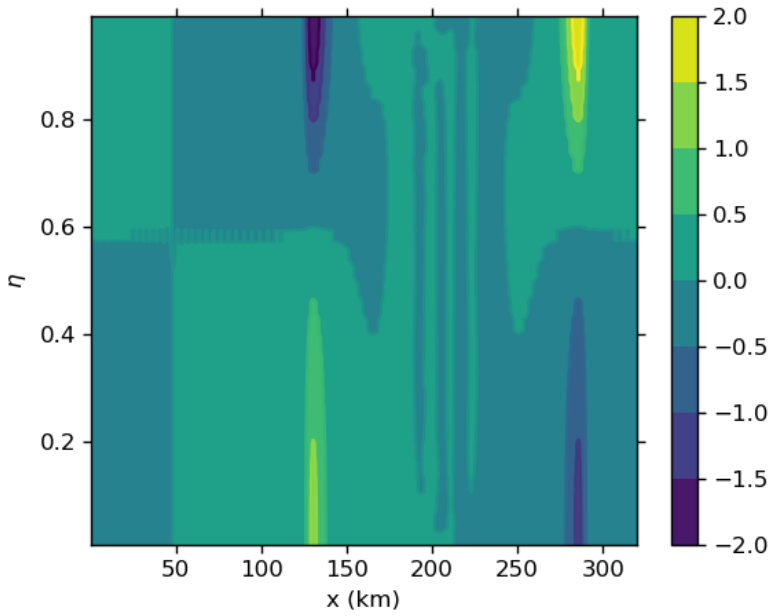

u'

$\Delta x = 1$km (320km x 10km), $\Delta t = 1.25$s, RK4, 30 vertical levels, lagrangian coordinate, MGD-1, after 2400 time steps, xz slice

Future Work, Summary and Conclusions

Future Work

Future Work

1. Multipatch domains: cubed-sphere grid
2. Computational efficiency: preconditioning, faster assembly and operator action
3. Fully conservative time stepping (solved for shallow water + Ripa)
4. Past Inviscid, Adiabatic Dry Dynamics: Subgrid Turbulence, Moisture, Tracers, Physics Coupling
5. Extension to new dynamical regimes: Deep-atmosphere, non-traditional, non-spherical geopotential, Sound-proof and non-hydrostatic equations
6. Static refinement through r-refinement

Summary and Conclusions

Summary

1. Developing a structure-preserving atmospheric dynamical core: Dynamico-FE
2. Use tensor-product Galerkin methods on structured grids: Obtain almost all the desired properties
3. Mimetic Galerkin Differences: Fixes dispersion issues

Conclusions

1. **Mimetic discretizations + Hamiltonian formulation** = Structure-Preservation = (Most) Desired Properties
2. **Many** choices of mimetic discretization, select the one that gets the other properties

Additional Slides

Motivating science question

1. For canonical, finite-dimensional Hamiltonian systems, structure-preserving numerics are essential to obtain correct long-term statistical behavior
2. The equations of (moist) adiabatic, inviscid atmospheric dynamics are a non-canonical, infinite-dimensional Hamiltonian system
3. Given (2), to what extent does (1) hold, especially since the real atmosphere has forcing and dissipation that makes it non-Hamiltonian?
4. **Studying these questions requires a structure-preserving atmospheric model!**

Poisson Brackets (Lagrangian Vertical Coordinate)

Poisson Brackets

From Dubos and Tort 2014, evolution of $\mathcal{F}[\vec{x}] = \mathcal{F}[\mu, \vec{v}, \Theta, z]$ is

$$\frac{d\mathcal{F}}{dt} = \{\frac{\delta\mathcal{F}}{\delta\vec{x}}, \frac{\delta\mathcal{H}}{\delta\vec{x}}\}_{SW} + \{\frac{\delta\mathcal{F}}{\delta\vec{x}}, \frac{\delta\mathcal{H}}{\delta\vec{x}}\}_{\Theta} + \langle\frac{\delta\mathcal{F}}{\delta z}\frac{\partial z}{\partial t}\rangle \tag{13}$$

$$\{\frac{\delta\mathcal{F}}{\delta\vec{x}}, \frac{\delta\mathcal{H}}{\delta\vec{x}}\}_{SW} = \langle\frac{\delta\mathcal{H}}{\delta\vec{v}} \cdot \vec{\nabla}\frac{\delta\mathcal{F}}{\delta\mu} - \frac{\delta\mathcal{H}}{\delta\vec{v}} \cdot \vec{\nabla}\frac{\delta\mathcal{F}}{\delta\mu}\rangle + \langle\frac{\vec{\nabla} \times \vec{v}}{\mu} \cdot (\frac{\delta\mathcal{F}}{\delta\vec{v}} \times \frac{\delta\mathcal{H}}{\delta\vec{v}})\rangle \tag{14}$$

$$\{\frac{\delta\mathcal{F}}{\delta\vec{x}}, \frac{\delta\mathcal{H}}{\delta\vec{x}}\}_{\Theta} = \langle\theta(\frac{\delta\mathcal{H}}{\delta\vec{v}} \cdot \vec{\nabla}\frac{\delta\mathcal{F}}{\delta\Theta} - \frac{\delta\mathcal{H}}{\delta\vec{v}} \cdot \vec{\nabla}\frac{\delta\mathcal{F}}{\delta\Theta})\rangle \tag{15}$$

where μ is the pseudo-density, $\vec{v} = \vec{u} - \vec{R}$ is the absolute (covariant) velocity, $\Theta = \mu\theta$ is the mass-weighted potential temperature and z is the height.

Equations of Motion: Lagrangian Vertical Coordinate

Equations of Motion

Choose $\mathcal{F} = \int \hat{\mu}$ (or $\int \hat{v} / \int \hat{\Theta} / \int \hat{z}$) to get:

$$\int \hat{\mu} \left(\frac{\partial \mu}{\partial t} + \vec{\nabla} \cdot \left(\frac{\delta \mathcal{H}}{\delta \vec{v}} \right) \right) = 0 \tag{16}$$

$$\int \hat{\Theta} \left(\frac{\partial \Theta}{\partial t} + \vec{\nabla} \cdot \left(\theta \frac{\delta \mathcal{H}}{\delta \vec{v}} \right) \right) = 0 \tag{17}$$

$$\int \hat{v} \left(\frac{\partial \vec{v}}{\partial t} + \frac{\zeta_v}{\mu} \times \frac{\delta \mathcal{H}}{\delta \vec{v}} + \theta \vec{\nabla} \left(\frac{\delta \mathcal{H}}{\delta \Theta} \right) + \vec{\nabla} \left(\frac{\delta \mathcal{H}}{\delta \mu} \right) \right) = 0 \tag{18}$$

$$\int \hat{z} \frac{\delta \mathcal{H}}{\delta z} = \int \hat{z} \left(g\mu + \frac{\partial p}{\partial \eta} \right) = 0 \tag{19}$$

Note that these are ALL 2D except for hydrostatic balance (8)

Hamiltonian (Lagrangian Vertical Coordinate)

Hamiltonian and Functional Derivatives

$$\mathcal{H} = \mathcal{H}[\mu, \vec{v}, \Theta, z] = \int \mu\left(\frac{\vec{u}\cdot\vec{u}}{2} + U\left(\frac{1}{\mu}\frac{\partial z}{\partial \eta}, \frac{\Theta}{\mu}\right) + gz\right) \tag{20}$$

$$\int \hat{v}\frac{\delta \mathcal{H}}{\delta \vec{v}} = \int \hat{v}\,(\mu\vec{u}) \tag{21}$$

$$\int \hat{\mu}\frac{\delta \mathcal{H}}{\delta \mu} = \int \hat{\mu}\left(\frac{\vec{u}\cdot\vec{u}}{2} + gz\right) \tag{22}$$

$$\int \hat{\Theta}\frac{\delta \mathcal{H}}{\delta \Theta} = \int \hat{\Theta}\frac{\partial U}{\partial \theta} = \int \hat{\Theta}\pi \tag{23}$$

$$\int \hat{z}\frac{\delta \mathcal{H}}{\delta z} = \int \hat{z}\left(g\mu + \frac{\partial p}{\partial \eta}\right) \tag{24}$$

Conservation

Energy

- Arises purely from anti-symmetry of the brackets PLUS $\frac{\delta \mathcal{H}}{\delta z} = 0$
- Mimetic Galerkin methods automatically ensure an anti-symmetric bracket
- Works for ANY choice of $\mathcal{H}$
- Something similar can be done with a mass-based vertical coordinate, although it is slightly more complicated

Mass, Potential Vorticity and Entropy

- These are Casimirs
- Can show that this discretization also conserves them

What is Themis?

1. PETSc-based software framework (written in Python and C)
2. Parallel, high-performance*, automated* discretization of variational forms
3. Using mimetic, tensor-product Galerkin methods on structured grids
4. Enables rapid prototyping and experimentation

Available online at `https://bitbucket.org/chris_eldred/themis`
*- *work in progress*

Design Principles

1. Leverage existing software packages: PETSc, petsc4py, Numpy, Sympy, Instant, ...
2. Restrict to a subset of methods: mimetic, tensor-product Galerkin methods on structured grids
3. Similar in spirit and high-level design to FEniCS/Firedrake

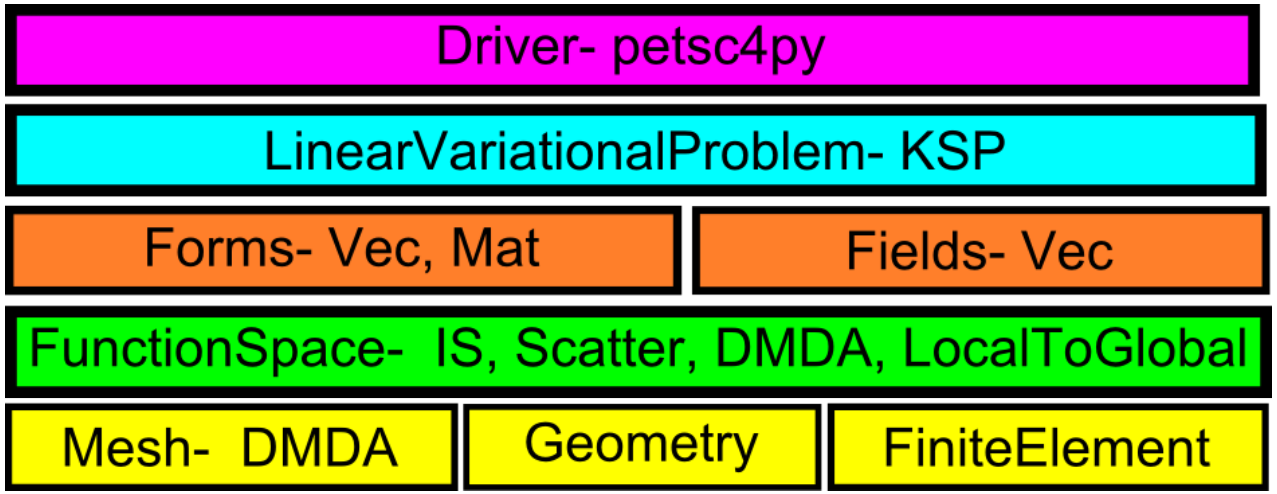

Current Capabilities

1. Support for single block structured grids in 1, 2 and 3 dimensions
2. Parallelism through MPI
3. Arbitrary curvilinear mappings between physical and reference space
4. Support for mimetic Galerkin difference elements, $Q_r^- \Lambda^k$ elements (both Lagrange and Bernstein basis) and mimetic spectral elements (single-grid version only): plus mixed, vector and standard function spaces on those elements
5. Essential and periodic boundary conditions
6. Facet and volume integrals
7. Linear and nonlinear variational problems

Planned Extensions

1. Matrix-free operator action
2. Manifolds and non-Euclidean domains
3. Multi-block domains: enables cubed-sphere
4. Multiple element types (in the same domain): enables MGD elements with non-periodic boundaries
5. UFL/TSFC/COFFEE integration
6. Geometric multigrid with partial coarsening
7. Weighted-row based assembly and operator action for MGD elements
8. Custom DM specialized for multipatch tensor product Galerkin methods
9. Further optimizations for assembly and operator action

Linear Modes